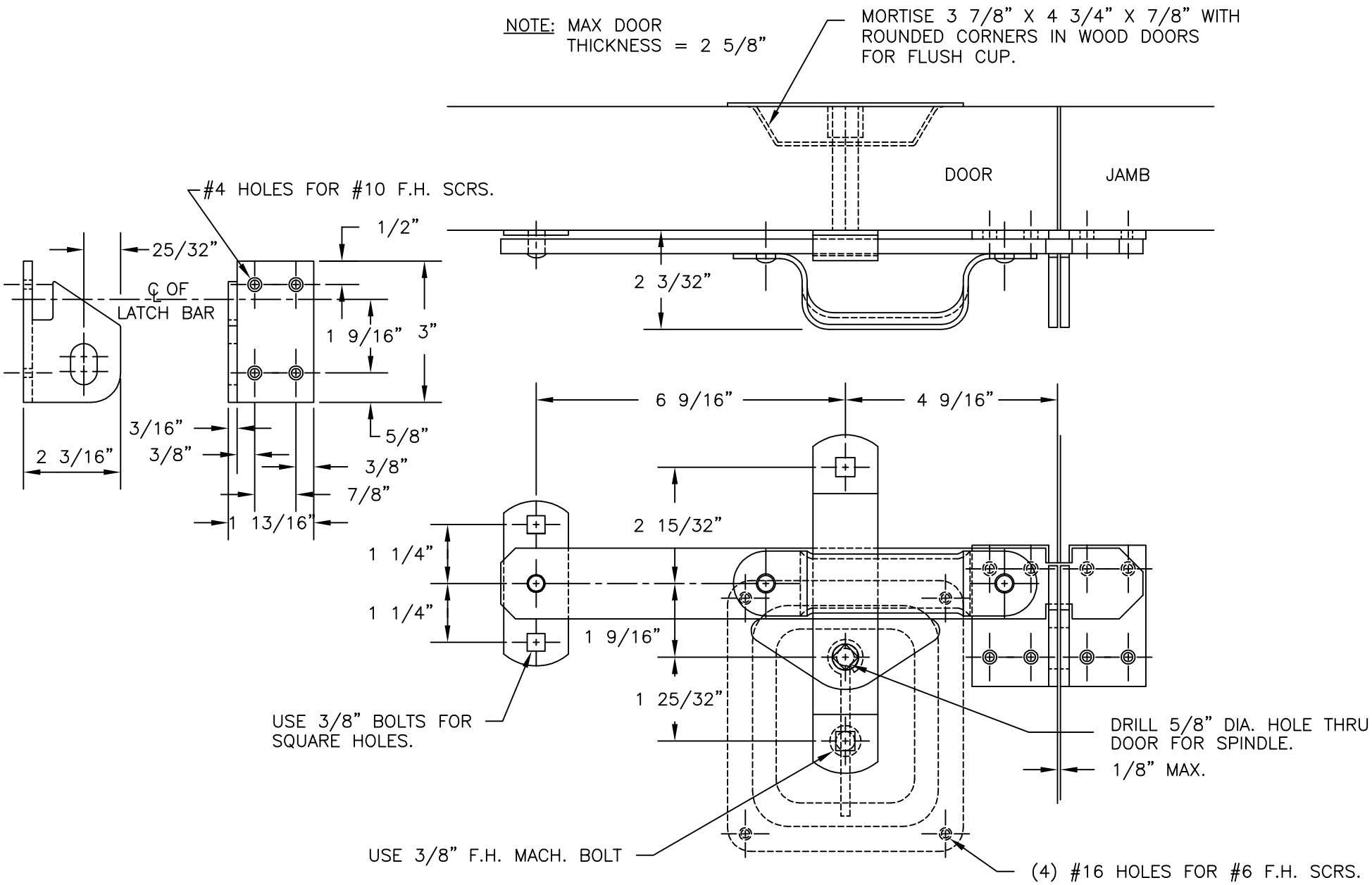

RICHARDS–WILCOX AURORA, IL. 0152.00023 LATCH JULY 1998